CLICK HERE for
MAIN SELECTION GUIDE

Visit **TURCK** on the Internet:
http://www.turck.com

Selection Guide

Die Protector	Whisker Probe	Quick Mount
Page J5	Pages J6	Page J7

Cushion Mount	Mounting Blocks	Mounting Brackets
	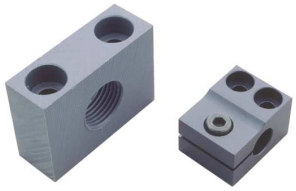	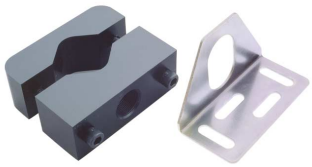
Page J7	Pages J8	Pages J9 - J12

Mounting Clamps	Protective Housing - “Wet Suit”	Spacer Plates
Page J13 - J14	Page J15	Page J15

Sensing Gap Gages	Firefast	Teflon/Ceramic Caps
Page J16	Pages J17	Pages J18

Plastic Covers	Threaded and Bolt on Tank Wells	Teflon Covers
Page J19 - J20	Page J21 - J22	Page J22

Selection Guide

Conduit Adapters	Cable Glands	Plug Taps
Page J23	Pages J24	Page J25

Lockwashers and Locknuts		Labels
	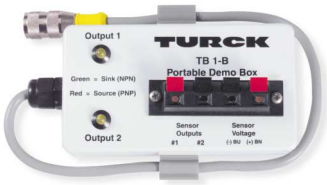	
Page J25 - J26	Pages J27	Pages J28

Selection Guide

Page Number

Die Protector
Converts standard sensor into impactable control devices. J5

Whisker Probe
A spring loaded actuator that converts threaded sensor. J6

Quick Mount
Allows quick removal and replacement of sensors. J7

Cushion Mount
Spring loaded protection for threaded sensors eliminates overtravel damage. J7

Mounting Blocks
For use with smooth barrel ***picoprox***® and threaded barrel sensors J8

Mounting Brackets
For use with Bottle and Can, Limit Switch Style, Q08 and threaded barrel sensors . . . . . J9 - J12

Mounting Clamps
For use with smooth and threaded barrel sensors . . . . . J13 - J14

Protective Housing
For submersion of Limit Switch Style and K40SR sensors J15

Spacer Plates
For use with Cylinder Position Indicators - ***CRS*** J15

Sensing Gap Gages
For mounting of barrel style sensors J16

Firefast
Protective Sleeving for Cordset Connections J17

Teflon/Ceramic Caps
For use with metal barrel sensors J18

Teflon Covers
For use Limit Switch Style, Long Range and Rectangular sensors . . . . . J19 - J22

Tank Wells
For tank mounting of barrel style capacitive sensors . . . . . J19 - J20

Plastic Covers
For use with Long Range style sensors J22

Conduit Adapters
For use with threaded barrel and Integral Terminal Chamber sensors J23

Note:

All dimensions in this section are shown as: inches [mm]

Cable Glands

For use with Integral Terminal Chamber sensors J24

Plug Taps

Taps for creating threads to mount sensors J25

Lockwashers

For use with threaded barrel sensors. J25

Locknuts

For use with threaded barrel sensors. J26

Test Boxes

For use with 2 and 3-wire DC sensors J27

Intrinsic Safety Labels

For identification of intrinsic safety wiring that is not color-coded blue J28

Die Protector

Part Number	ID Number	Dimensions							
		A	B	C	D	E	F	G	H
DP-08-25-08	A2521	2.25 57.2	1.00 25.4	M8x1	0.43 11.0	0.72 18.4	2000 N 450 lbft	0.20 5.08	.115 2.93
DP-12-25-12	A2519			M12x1	0.62 15.7	0.67 17.4	20500 N 4608 lbft	0.25 6.35	.166 4.22
DP-18-25-18	A2520			M18x1	0.87 22.1	0.87 22.1	45000 N 10115 lbft	0.25 6.35	.166 4.22

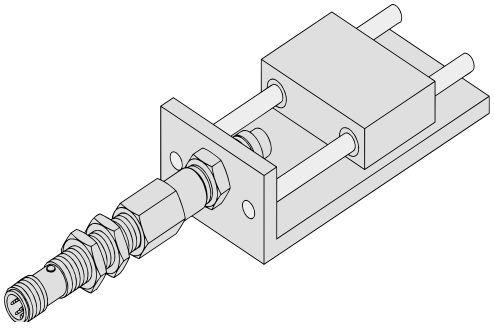

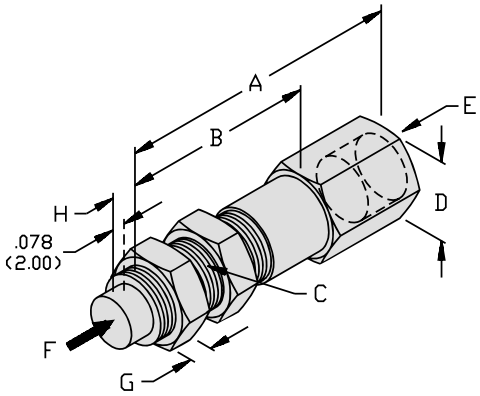

Recommended Sensors for Die Protector

Die Protector	DP-08-25-08	DP-12-25-12	DP-18-25-18
Sensors	Bi 1.5U-EG08-AP6X Bi 2-EG08-AP6X	Bi 2-G12-AP6X-H1141 Bi 2U-EM12-AP4X	Bi 5-G18-AP6X (When not fully engaged)

Note: Works with all shielded NPN, PNP, quick disconnect or potted cable versions of the listed part numbers.

Whisker Probe

Part Number	ID Number	Dimensions									
		A	B	C	D	E	F	G	H	J	Probe Travel
WP-08-50-03	A2527	3.92 99.6	1.25 31.8	0.15 3.8	M8x1	.125 3.2	2.00 50.8	1.95 49.5	.436 11.1	M8x1 to depth of 0.86 21.8	For activation: .071(1.80) to .075(1.91) Maximum: .080(2.03)
WP-12-50-03	A2528				M12x1	.125 3.2			.623 15.8	M12x1 to depth of 0.71 18.0	For activation: .056(1.42) to .080(2.03) Maximum: .085(2.15)
WP-12-50-06	A2529					.250 6.4					

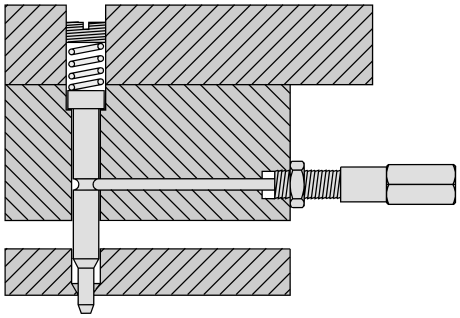

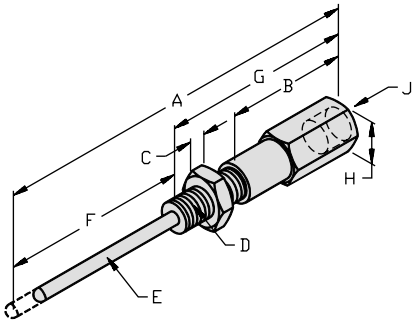

Recommended Sensors for Whisker Probe

Die Protector	WP-08-50-03	WP-12-50-03	WP-12-50-06
Sensors	Bi 1-G08-AN6 Bi 1.5-G08-AP6X Bi 1.5U-EG08-AP6X Bi 2-EG08-AP6X	Bi 2-G12-AP6X-H1141 Bi 2U-EM12-AP4X Bi 3U-M12-AP6X-H1141	Bi 2-G12-AP6X-H1141 Bi 2U-EM12-AP4X Bi 3U-M12-AP6X-H1141

Note: Works with all shielded NPN, PNP, quick disconnect or potted cable versions of the listed part numbers.

Quick Mount

Part Number	ID Number	Dimensions					
		A	B	C	D	E	F
QM-08 QM-08L	A2511 A2512	0.32 8.18	1.28 (32.4) 1.90 (48.0)	0.69 (17.5) 1.34 (34.0)	M12x1	0.15 3.85	0.67 16.9
QM-12 QM-12L	A2513 A2514	0.48 12.1	1.34 (33.7) 1.76 (44.8)	0.77 (19.5) 1.18 (30.0)	M16x1.5	0.16 4.01	0.86 21.8
QM-18 QM-18L	A2515 A2516	0.71 18.1	1.52 (38.5) 2.28 (58.0)	0.79 (20.0) 1.57 (40.0)	M24x1.5	0.19 4.95	1.18 30.0
QM-30 QM-30L	A2517 A2518	1.19 30.1	1.50 (35.0) 2.28 (58.0)	0.79 (20.0) 1.57 (40.0)	M36x1.5	0.24 6.13	1.61 41.0

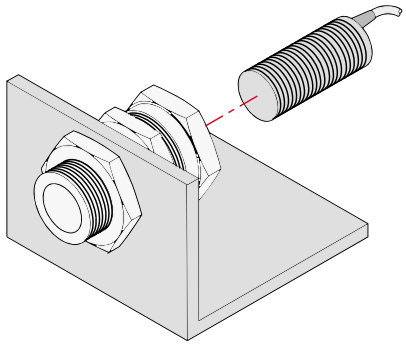

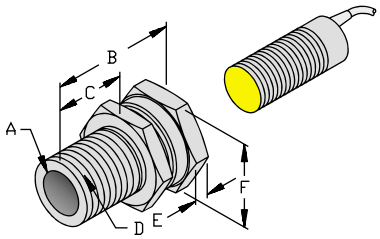

Cushion Mount

Part Number	ID Number	Dimensions									
		A (INSIDE THREAD)	B (OUTSIDE THREAD)	C (MAX.)	D (ACROSS FLATS)	E (MAXIMUM ALLOWABLE OVERTRAVEL)	F	G	H	J	K
CM-08 CM-08N	A2503 A2504	M8x1	M16x1.5	.433 11.0	.875 22.2	.395 10.0	.750 19.1	.155 3.94	.200 5.08	.600 15.2	.0004 .010
CM-12 CM-12N	A2505 A2506	M12x1	M22x1.5	.433 11.0	1.19 30.2	.395 10.0	.750 19.1	.155 3.94	.245 6.22	.860 21.8	.010 .250
CM-18 CM-18N	A2507 A2508	M18x1	M30x1.5	.598 15.2	1.38 35.1	.395 10.0	1.00 25.4	0.02 5.08	.315 8.00	1.18 30.0	.001 .035
CM-30 CM-30N	A2509 A2510	M30x1.5	M47x1.5	.972 24.7	2.05 52.1	.591 15.0	1.37 34.9	0.20 5.08	.315 8.00	1.75 44.5	.035 .890

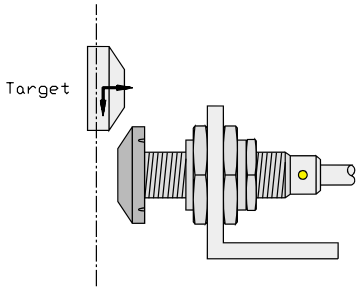

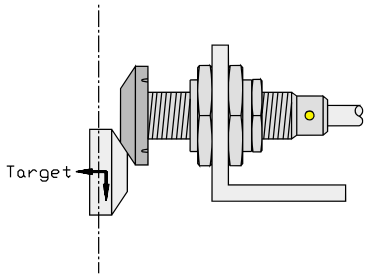

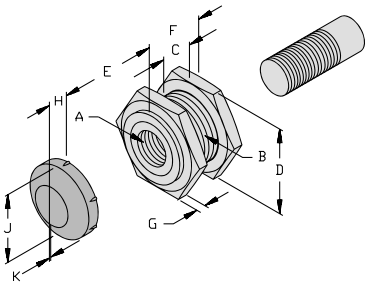

Mounting Blocks

Part Number	ID Number	Barrel Diameter
MBS-40	69477 00	4.0 mm
MBS-65	69478 00	6.5 mm
MBS-80	69479 00	8.0 mm

Material: Aluminum
Finish: Black Anodized

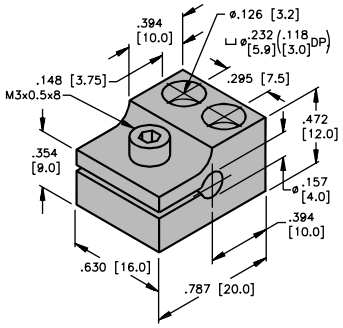

MBS-40

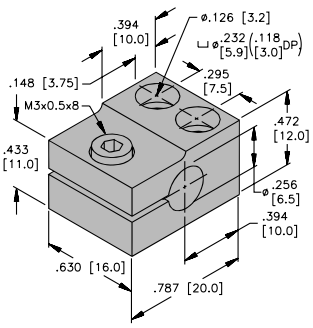

MBS-65

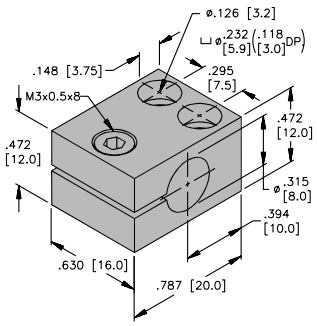

MBS-80

For use with H Barrel ***picoprox***® sensors.

Part Number	ID Number	Barrel Diameter	Dimensions									
			A	B	C	D	E	F	G	H	J	K
MB-S12	A3150	12 mm	0.44 11.2	0.24 6.2	0.77 19.6	0.20 5.0	0.34 8.7	0.20 5.0	0.45 11.4	1.26 32.0	0.91 23.0	M12x1
MB-S18	A3155	18 mm	0.63 16.0	0.30 7.6	1.20 30.5	0.22 5.5	0.38 9.6	0.25 6.4	0.57 14.5	1.80 45.8	1.15 29.3	M18x1

Material: Delrin

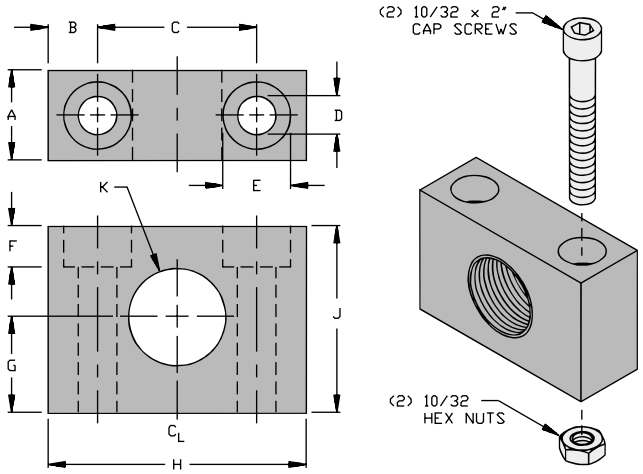

For use with 12 and 18 mm threaded barrel sensors. Mounting hardware included.

Mounting Brackets

Part Number	ID Number
MB-Q130	A3145

Material: Stainless Steel

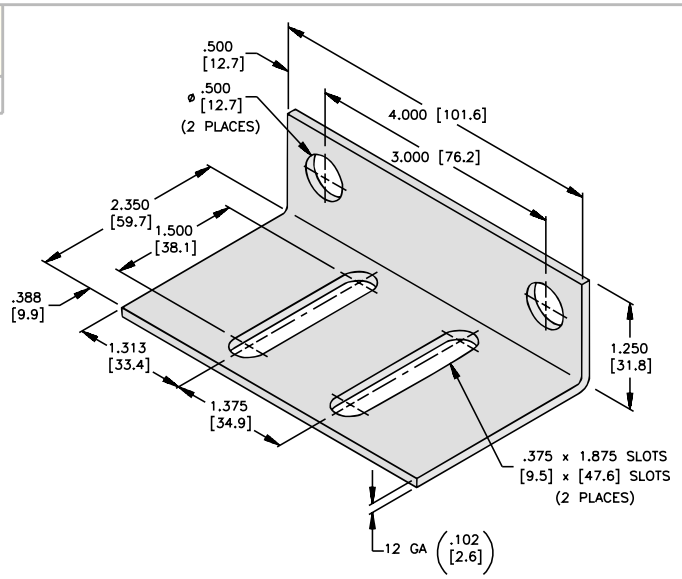

For use with Bottle and Can sensors.

Part Number	ID Number
LSAP-2	M6942900

Material: Stainless Steel

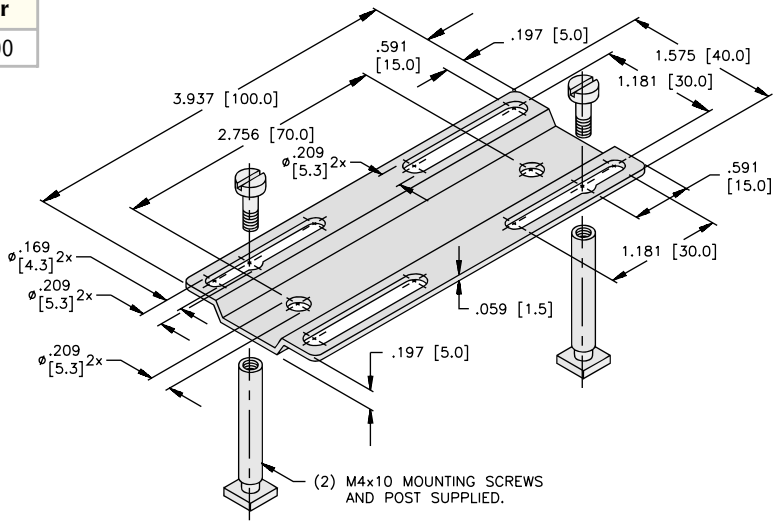

For use with Limit Switch Style ***combiprox , C*prox and multiprox*** sensors.

Mounting Brackets

Part Number	ID Number	Dimensions											
		A	B	C	D	E	F	G	H	J	K	L	M
MBSS-08	A2522	1.00 25.4	1.13 28.7	1.25 31.8	.344 8.74	.312 7.92	.218 5.54	.625 15.9	.468 11.9	.312 7.92	.070 1.78	.375 9.53	.281 7.14
MBSS-12	A2523	1.50 38.1	1.37 34.8	1.50 38.1	.500 12.7	.550 13.9	.218 5.54	.750 19.1	.563 14.3	.375 9.53	.070 1.78	.500 12.7	.312 7.92
MBSS-18	A2524	2.00 50.8	1.37 34.8	1.75 44.5	.750 19.1	.218 19.1	.218 5.54	1.00 25.4	.563 14.3	.375 9.53	.070 1.78	.625 15.9	.312 7.92
MBSS-30	A2525	2.50 63.5	1.75 44.5	2.25 57.2	1.18 30.5	.907 23.0	.218 5.54	1.37 34.8	.812 20.6	.440 11.2	.085 2.16	.750 19.1	.406 10.3
MBSS-47	A2526	3.50 88.9	2.00 50.8	2.50 63.5	1.87 47.5	1.50 38.1	.218 5.54	1.50 38.1	1.00 25.4	.500 12.7	.120 3.05	.750 19.1	.500 12.7

Material: 304 Stainless Steel

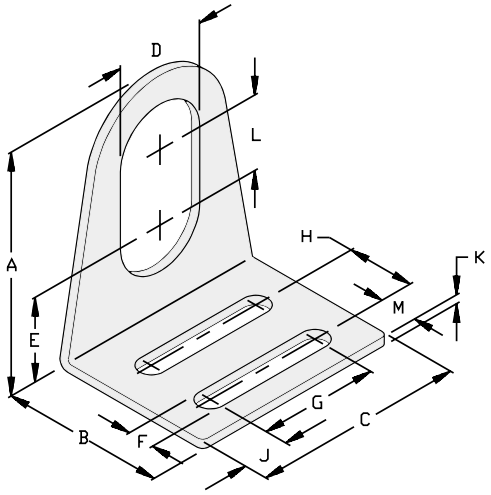

Part Number	ID Number
MB-Q14/20	A3147

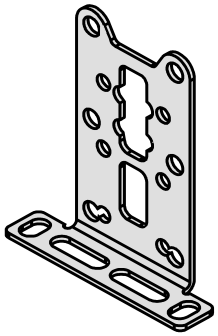

ISOMETRIC VIEW
HALF SCALE

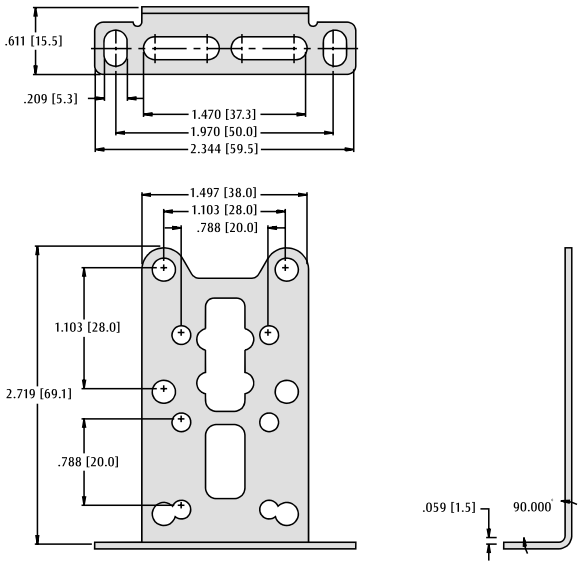

Accessories

Mounting Brackets

Part Number	ID Number	Barrel Dia.	Dimensions														
			A	B	C	D	E	F	G	H	J	K	L	M	N	P	SLOT
MB-8	A3130-1	8 mm	1.26 32.0	0.66 16.7	2.00 50.8	1.00 25.4	0.45 11.5	0.30 7.5	1.41 35.8	0.33 8.4	0.06 1.5	0.24 6.0	0.67 17.0	0.35 8.8	0.83 21.0	.84 21.4	0.16 x 0.59 4.0 x 15.0
MB-12	A3130	12 mm	1.63 41.5	0.87 22.15	2.50 63.5	1.25 31.8	0.61 15.5	0.31 7.9	1.88 47.8	0.50 12.7	0.06 1.5	0.35 9.0	0.87 22.0	0.45 11.5	1.02 26.0	1.13 28.7	0.22 x 0.73 5.6 x 18.6
MB-18	A3135	18 mm	1.63 41.5	0.79 20.0	2.50 63.5	1.25 31.8	0.61 15.5	0.31 7.9	1.88 47.8	0.75 19.1	0.06 1.5	0.35 9.0	0.87 22.0	0.45 11.5	1.04 26.3	1.15 29.1	0.22 x 0.75 5.6 x 19.0
MB-30	A3140	30 mm	2.62 66.5	1.32 33.5	4.25 108.0	1.75 44.5	0.88 22.4	0.37 9.5	3.50 88.9	1.19 30.2	0.07 1.8	0.63 16.0	1.14 29.0	1.18 30.0	1.54 39.0	2.06 52.2	0.28 x 1.25 7.1 x 31.8

MB-8, MB-18 Material: 16 Gage Cold Roll Steel
MB-12, MB-30 Material: 14 Gage Cold Roll Steel
Finish: Galvanized

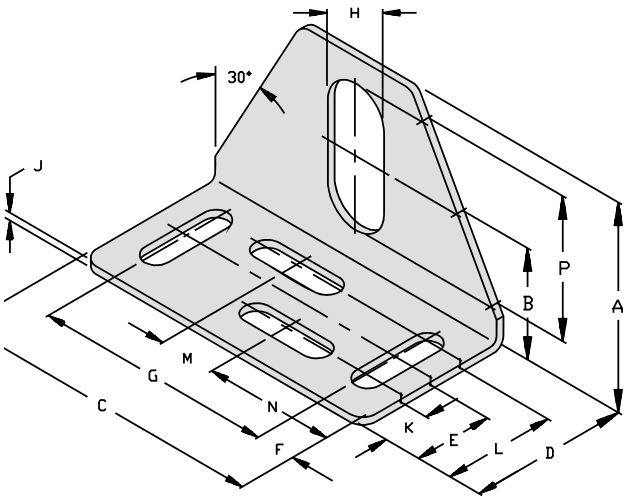

For use with 8, 12, 18 and 30 mm barrel sensors.

Part Number	ID Number
MB-47	M6945200

Material: Cold Roll Steel
Finish: Galvanized

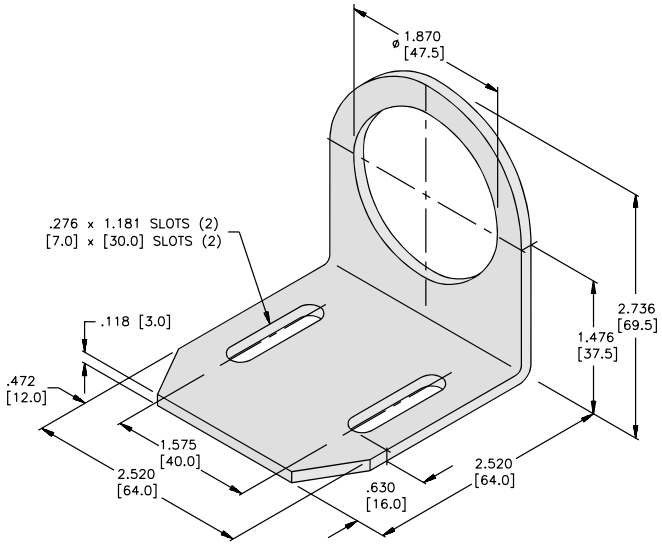

For use with 47 mm barrel sensors.

Mounting Brackets

Part Number	ID Number
TBZE-L	A5150
TBZE-R	A5151

Material:
Galvanized Plated Steel

Replaces:

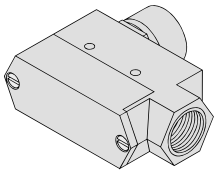

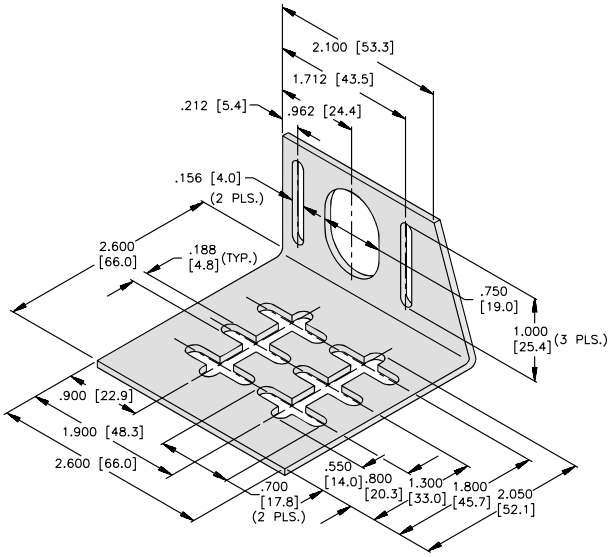

TBZE-L

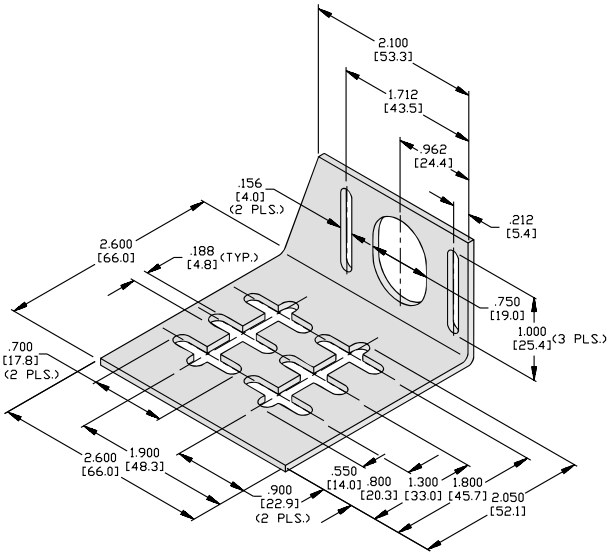

TBZE-R

For use with ***Q08*** rectangular housing and 18 mm barrel sensors.

Mounting Clamps

Part Number	ID Number	Barrel Diameter	Dimensions							
			A	B	C	D	E	F	G	H
BS-11	M6946200	11 mm	0.43 11.0	0.20 5.0	0.79 20.0	1.26 32.0	0.79 20.0	0.47 12.0	0.32 8.2	0.17 4.3
BS-20	M6946400	20 mm	0.79 20.0	0.24 6.0	1.18 30.0	1.81 46.0	1.22 31.0	0.59 15.0	0.37 9.5	0.21 5.3
BS-40	M6946600	40 mm	1.57 40.0	0.24 6.0	1.97 50.0	2.56 65.0	1.87 47.5	0.63 16.0	0.37 9.5	0.21 5.3

Material:
Bracket - PBT
Screws - Galvanized Zinc

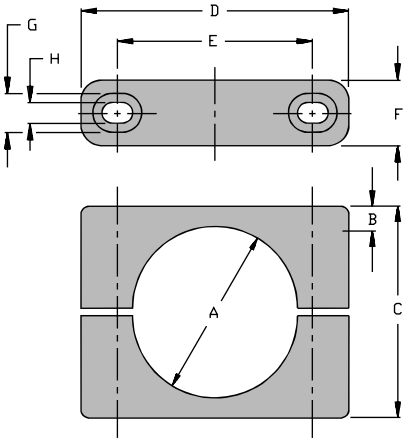

SCREWS INCLUDED:
BS-11: (2) M4x22 -SLOTTED HEAD
BS-20: (2) M5x30 -CAP SCREWS
BS-40: (2) M5x50 -CAP SCREWS

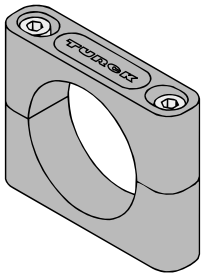

For use with 11, 20 and 40 mm smooth plastic barrel sensors.

Part Number	ID Number	Barrel Diameter	Dimensions						
			A	B	C	D	E	F	G
BS-12	M6947000	12 mm	0.48 12.2	1.10 28.0	1.57 40.0	0.98 25.0	0.59 15.0	0.63 16.0	0.59 15.0
BS-18	M6947100	18 mm	0.72 18.2	1.30 33.0	1.77 45.0	1.18 30.0	0.83 21.0	0.87 22.0	0.59 15.0

Material: PA 66-GF

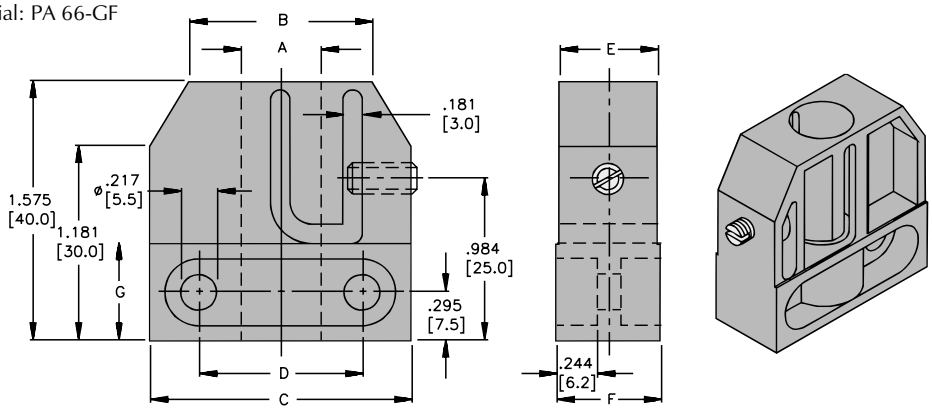

For use with 12 and 18 mm threaded barrel sensors.

Mounting Clamps

Part Number	ID Number	Barrel Diameter
BS-540	M6947500	4.0 mm
BS-865	M6947600	6.5 mm

Block Material: Aluminum
Sleeve Material: Steel

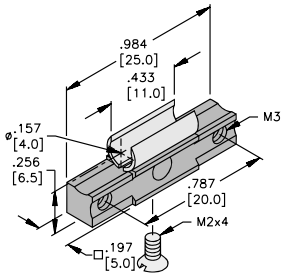

BS-540

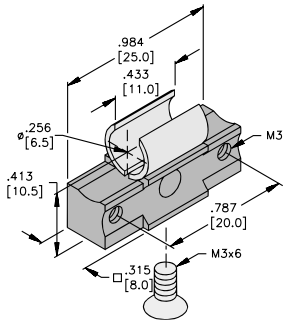

BS-865

For use with H Barrel ***picoprox***® sensors.

Mounting Clamps

Part Number	ID Number	A	B	C	D
TSG-12	A2500	1.75 [44.5]	1.25 [31.8]	12 mm (threaded or non-threaded)	0.37-0.81 [9.40-20.6]
TSG-18	A2501	1.90 [48.3]	1.48 [37.5]	18 mm (threaded or non-threaded)	0.63-1.12 [16.0-28.4]
TSG-30	A2502	3.45 [87.6]	2.00 [50.8]	30 mm (threaded or non-threaded)	1.00-1.75 [25.4-44.5]

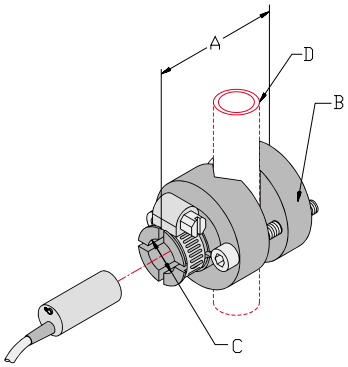

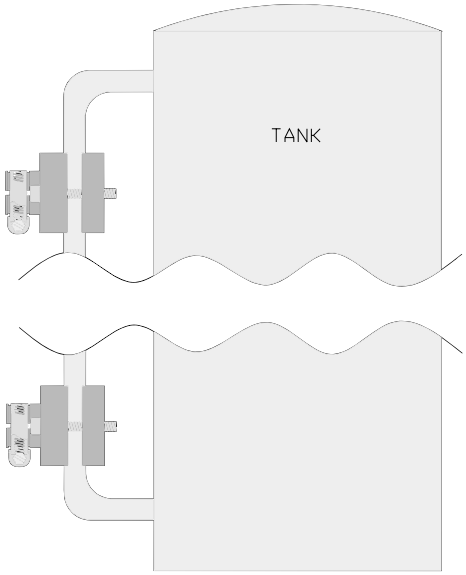

Protective Housing "Wet Suit"

Part Number	ID Number
SG40/2	M6949700

For extreme ambient conditions or long term exposure to elevated temperatures up to 170°C (338°F).
Especially resistant to UV-radiation and ozone.
IP 68, NEMA 13

Housing Material: ULTEM 1000
Cover Plate Material: PBT-GF
Cable Gland Material: PVDF
Seal Material: Viton

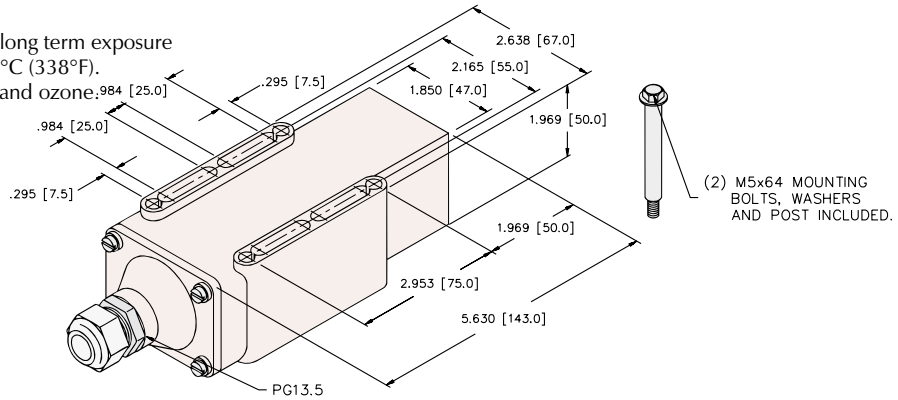

Recommended cable styles: 16-18 AWG
For use with Limit Switch Style ***combiprox, multiprox, C*prox*** and ***K40SR*** sensors.

Spacer Plates

Part Number
SP-_._____[1)]-C

Material: Aluminum

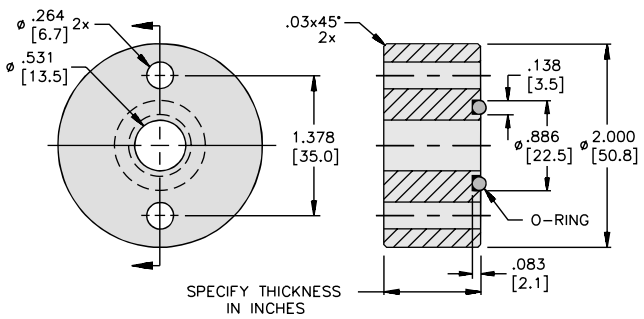

[1)] add desired thickness in inches.
Minimum thickness: 0.125", in .005 increments.
For use with Cylinder Position Indicators, ***CRS Series***

Sensing Gap Gages

Part Number	ID Number	Barrel Diameter	Dimensions			
			A	B	C	D
SG-Bi0.8-0.64	A5300	5 mm	0.197 5.0	0.025 0.64	0.378 9.6	0.252 6.4
SG-Bi 1-0.81	A5301	8 mm	0.315 8.0	0.032 0.81	0.378 9.6	0.374 9.5
SG-Bi 2-1.62	A5302	12 mm	0.472 12.0	0.064 1.62	0.500 12.7	0.630 16.0
SG-Bi 5-4.05	A5303	18 mm	0.709 18.0	0.160 4.05	0.500 12.7	0.878 22.3
SG-Bi10-8.1	A5304	30 mm	1.181 30.0	0.319 8.1	0.752 19.1	1.492 37.9
SG-Bi15-12.15	A5305	30 mm	1.181 30.0	0.478 12.15	0.748 19.0	1.492 37.9
Use above Gap Gages for embeddable (Shielded) sensors.						
SG-Ni 2-1.62	A5306	8 mm	0.315 8.0	0.064 1.62	0.347 9.5	0.378 9.6
SG-Ni 4-MG12-3.24	A5307	12 mm	0.472 12.0	0.128 3.24	0.528 13.4	0.626 15.9
SG-Ni 4-S12-3.24	A5308	12 mm	0.472 12.0	0.128 3.24	0.500 12.7	0.626 15.9
SG-Ni 5-4.05	A5309	12 mm	0.472 12.0	0.160 4.05	0.500 12.7	0.626 15.9
SG-Ni 8-6.48	A5310	18 mm	0.709 18.0	0.255 6.48	0.500 12.7	0.878 22.3
SG-Ni10-MG18-8.1	A5311	18 mm	0.709 18.0	0.319 8.1	0.500 12.7	0.878 22.3
SG-Ni10-P18-8.1	A5312	18 mm	0.709 18.0	0.319 8.1	0.756 19.2	0.752 19.1
SG-Ni15-MG30-12.15	A5313	30 mm	1.181 30.0	0.478 12.15	1.063 27.0	1.240 31.5
Use above Gap Gages for non-embeddable (Nonshielded) sensors.						

Material: White Delrin

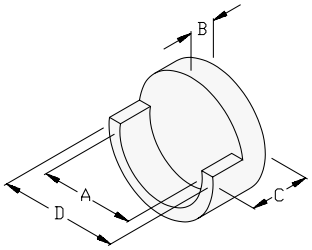

Accessories

NEW

firefast™ Connector Protective Sleeving

Part Number	ID Number
FF 1/2INCH BLACK (10/BAG)	A0076
FF 3/4INCH BLACK (10/BAG)	A0075

Teflon Caps

Part Number	ID Number	Barrel Diameter	Dimensions				
			A	B	C	D	E
CAP 12-PTFE	69662 00	12 mm	0.63 (16.0)	0.03 (0.7)	0.63 (16.0)	M12x1	- - -
CAP 18N-PTFE	A3056	18 mm	0.87 (22.0)	0.04 (1.0)	0.79 (20.0)	M18x1	0.43 (11.0)
CAP 18-PTFE	A3055	18 mm	0.87 (22.0)	0.04 (1.0)	0.35 (9.0)	M18x1	- - -
CAP 30N-PTFE	A3058	30 mm	1.34 (34.0)	0.05 (1.2)	1.14 (29.0)	M30x1.5	0.71 (18.0)
CAP 30-PTFE	A3057	30 mm	1.34 (34.0)	0.05 (1.2)	0.35 (9.0)	M30x1.5	- - -
CAP 47-PTFE	A3060	47 mm	2.20 (55.8)	0.06 (1.6)	0.38 (9.7)	PG 36	- - -

Material: PTFE

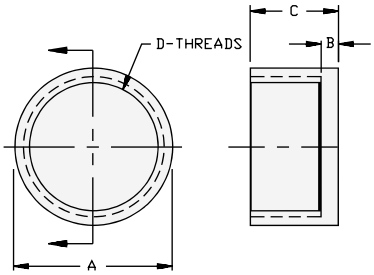

For use with metal barrel sensors.

Ceramic Caps

Part Number	ID Number	Dimensions				Max Temp.	Density	Porosity	Thermal Conductivity (@20°C)
		A	B	C	D				
CAP 12-CER	A2530	0.63 (16.0)	0.04 (1.10)	.352 (8.94)	M12x1	4172°F (2300°C)	3.2 oz/in^3 (6 g/cm^3)	Impervious	14 BTU • in/ft^2 • m• °F (2 W/m • °K)
CAP 18-CER	A2531	0.88 (22.3)	0.04 (1.10)	.352 (8.94)	M18x1				
CAP 30-CER	A2532	1.34 (34.0)	0.08 (2.00)	.352 (8.94)	M30x1.5				

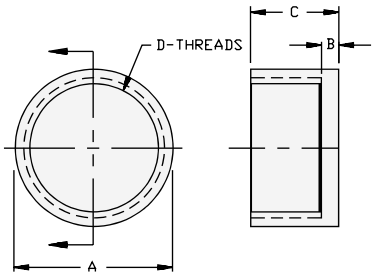

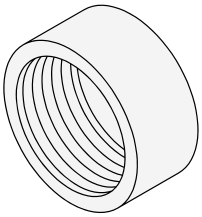

For use with embeddable metal barrel sensors.

Accessories

Teflon Covers

Part Number	ID Number	Material
T-CK40-T-FC	A5202	Teflon®
T-CK40-D-FC	A5160	Delrin®
T-CK40-T-MCC	A5201	Teflon

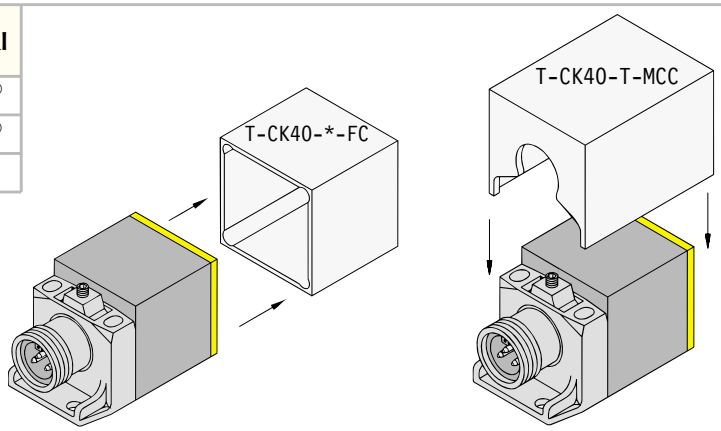

For use with ***CK40*** style sensors.

Part Number	ID Number
T-CP40-T-C	A5204

Material: Teflon

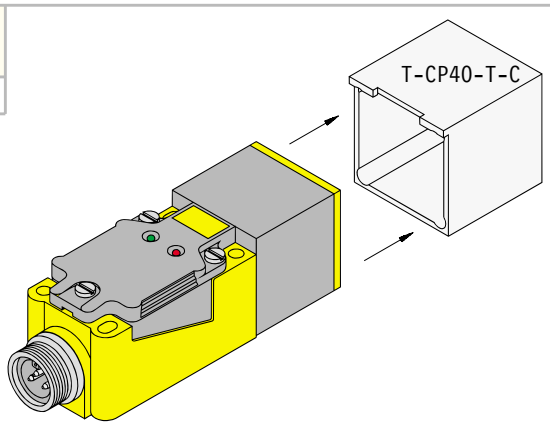

For use with ***CP40*** style sensors.

Part Number	ID Number
T-CP80-T	A5207

Material: Teflon

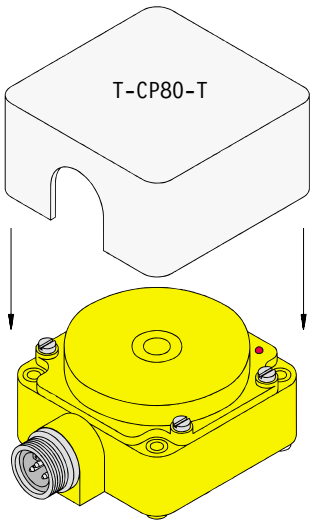

For use with ***CP80*** style sensors.

Teflon Covers

Part Number	ID Number
T-Q08-T-MCC	A5155

Material: Teflon®

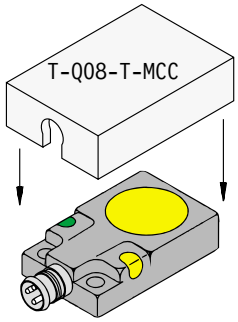

For use with ***Q08*** style sensors.

Part Number	ID Number
T-Q34-D-FC	A5210

Material: HDPE

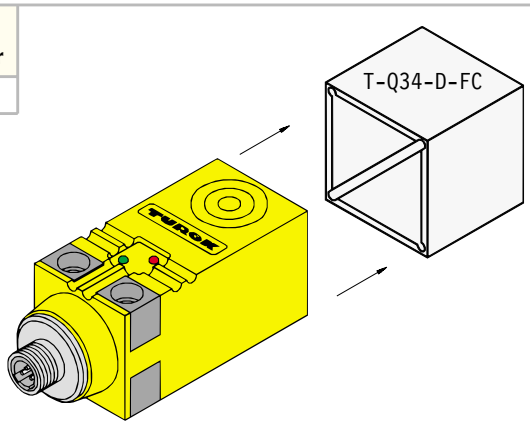

For use with ***Q34*** style sensors.

Part Number	ID Number	Material
T-Q50-T	A5205	Teflon
T-Q50-D	A5206	HDPE
T-Q50-T-C	A5203	Teflon

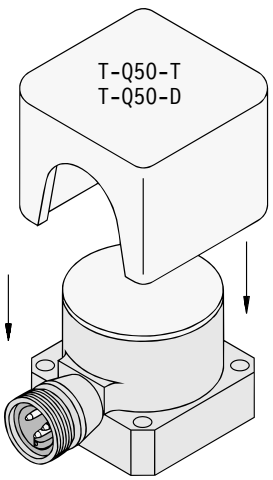

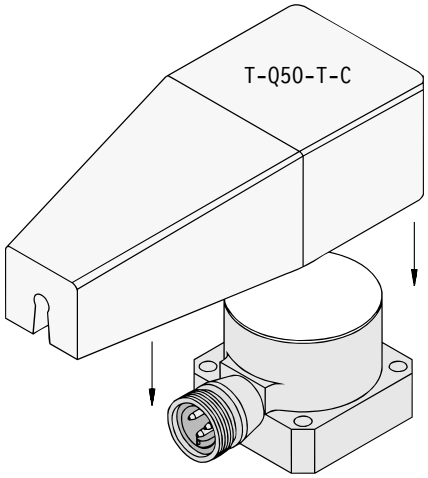

For use with ***Q50*** style sensors with quick disconnect.

Threaded Tank Wells

Part Number	ID Number	Material	Thread Size	Drill Size	Application
TWD-12S	A5051	Delrin	3/4-14 NPT	59/64	12 mm threaded capacitive sensors for liquid level sensing.
TWD-18S	A5055	Delrin	3/4-14 NPT	59/64	18 mm threaded capacitive sensors for liquid level sensing.
TWT-18S	A5050	Teflon	3/4-14 NPT	59/64	18 mm threaded capacitive sensors for liquid level sensing.
TWD-18S-1	A5057	Delrin	1-11 1/2 NPT	1-5/32	18 mm threaded capacitive sensors for liquid level sensing.
TWT-18S-1	A5056	Teflon	1-11 1/2 NPT	1-5/32	18 mm threaded capacitive sensors for liquid level sensing.
TWD-30S	A5065	Delrin	1 1/4-11 1/2 NPT	1-1/2	30 mm threaded capacitive sensors for liquid level sensing.
TWT-30S	A5060	Teflon	1 1/4-11 1/2 NPT	1-1/2	30 mm threaded capacitive sensors for liquid level sensing.
TWD-40S	A5075	Delrin	1 1/2-11 1/2 NPT	1-47/64	40 mm smooth capacitive sensors for liquid level sensing.
TWT-40S	A5070	Teflon	1 1/2-11 1/2 NPT	1-47/64	40 mm smooth capacitive sensors for liquid level sensing.

Pressure Rating: 150 PSI

TWD-12S

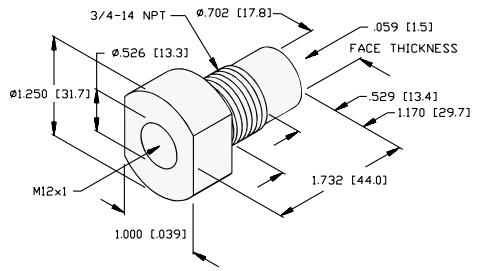

TWD-18..
TWT-18..

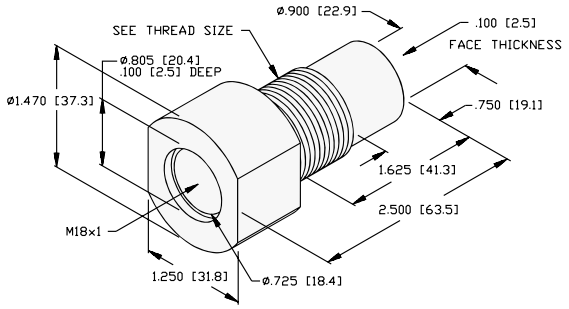

TWD-30S
TWT-30S

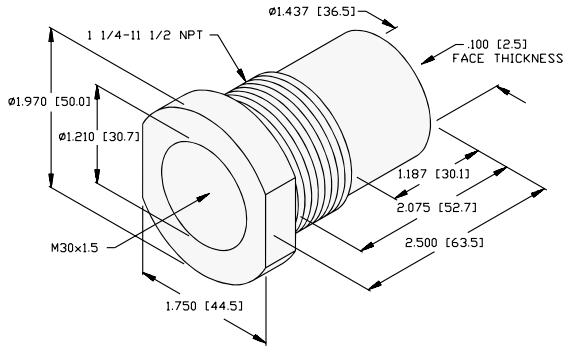

TWD-40S
TWT-40S

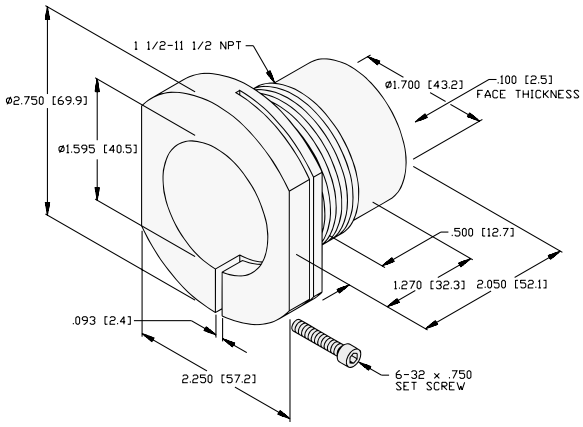

Bolt-on Tank Wells

Part Number	ID Number	Dimension A
TWU-30B	A5005	1.181 30.0
TWU-40B	A5000	1.575 40.0

Material: UHMW/PE
Pressure Rating: 80 PSI

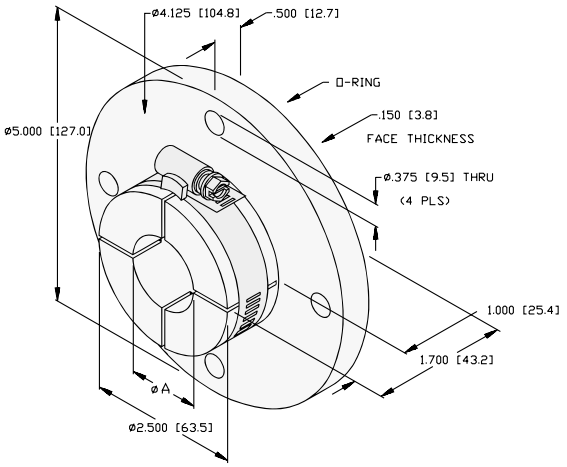

For use with 30 and 40 mm barrel sensors.

Plastic Covers

Part Number	ID Number	Sensor Diameter	Dimensions		
			A	B	C
CP80-P-CONE	A5218	80 mm	2.756 70.0	0.925 23.5	0.129 3.3
K90-P-CONE	A5220	90 mm	3.150 80.0	1.250 31.2	0.341 8.7

Material: PVC

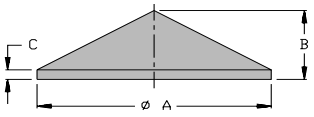

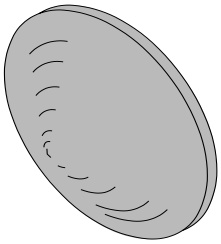

For use with ***CP80***, ***K90*** and ***K90SR*** style sensors.

Conduit Adapters

Part Number	ID Number	Barrel Diameter	Dimensions					
			A	B	C	D	E	F
TMF 12-G	A3310	12 mm	1.15 29.2	1.00 25.4	1.00 25.4	0.50 12.7	0.50 12.7	M12x1
TMF 18-G	A3320	18 mm	1.15 29.2	1.00 25.4	1.00 25.4	0.50 12.7	0.50 12.7	M18x1
TMF 30-G	A3345	30 mm	1.73 44.0	1.50 38.1	1.00 25.4	0.50 12.7	0.40 10.2	M30x1.5
TMF 47-G	A3360	47 mm	2.30 58.4	2.00 50.8	1.75 44.5	1.05 26.7	0.70 17.8	PG36
Use above Conduit Adapters with G and P Barrel sensors.								
TMF 18-MS	A3330	18 mm	1.15 29.2	1.00 25.4	2.00 50.8	1.50 38.1	0.50 12.7	M18x1
TMF 30-MS	A3355	30 mm	1.73 44.0	1.50 38.1	2.00 50.8	0.60 15.2	1.40 35.6	M30x1.5
Use above Conduit Adapters with M and S Barrel sensors.								

Material: Aluminum

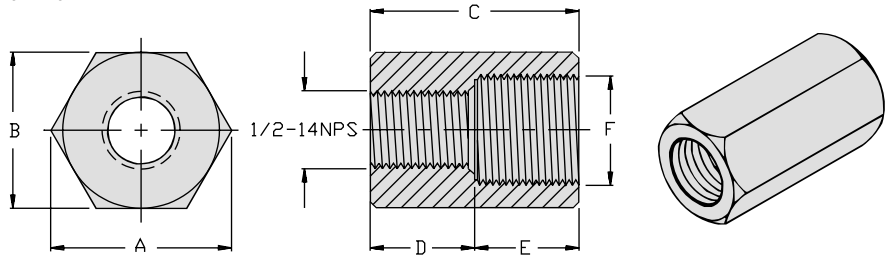

Part Number	ID Number
TMF 9-14	A3290

Material: Delrin

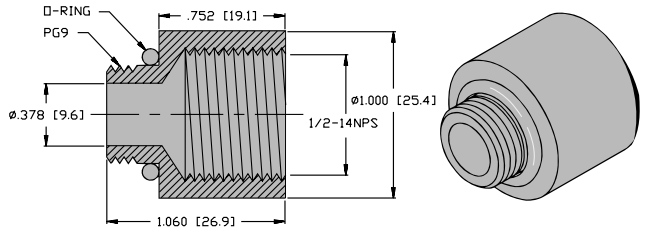

For use with Integral Terminal Chamber sensors

Part Number	ID Number
TMF 13.5-14	A4500

Material: Delrin

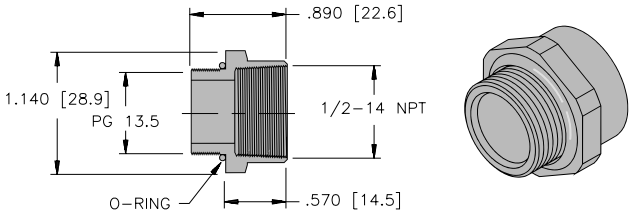

For use with Integral Terminal Chamber sensors

Cable Glands

Part Number	ID Number
PG 9	69655

Material: Polyamide Plastic
Recommended Cable Style: 18 and 20 AWG

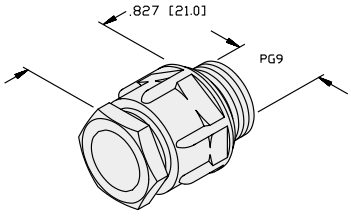

For use with Integral Terminal Chamber sensors

Part Number	ID Number
PG 13.5	69659

Material: Polyamide Plastic

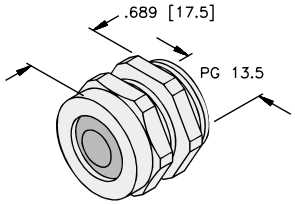

For use with Long Range Integral Terminal Chamber sensors

Part Number	ID Number
1/2-14NPT	A3480

Material: Polyamide Plastic
Recommended Cable Style: 18 and 20 AWG

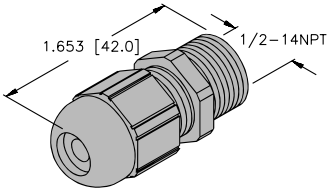

For use with Integral Terminal Chamber sensors

Plug Taps

Part Number	ID Number	Thread	Drill Hole Diameter (mm)
PT-M05	A3160	M5x0.5	4.5
PT-M08	A3162	M8x1	7.0
PT-M12	A3166	M12x1	11.0
PT-M18	A3168	M18x1	17.0
PT-M30	A3170	M30x1.5	28.5
PT-PG 9	A3467	PG 9	14.0
PT-PG 13.5	A3464	PG13.5	19.0
PT-PG 21	A3466	PG21	27.0
PT-PG 36	A3468	PG36	45.5

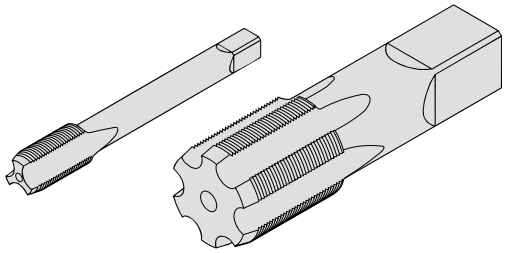

Lockwashers

Part Number	ID Number	Barrel Diameter	Dimensions	
			A	B
LW-12	A3127	12 mm	0.70 17.8	0.52 13.2
LW-18	A3128	18 mm	1.06 26.8	0.76 19.3
LW-30	A3129	30 mm	1.76 44.8	1.26 32.0

Material: Brass
Finish: Copper, Nickel, Chrome Plating

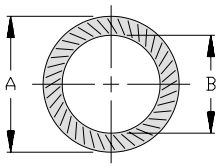

For use with threaded barrel sensors.

Locknuts

Chrome Plated Brass

Part Number	ID Number	Barrel Diameter	Dimensions A	Dimensions B	Dimensions C	Dimensions D
LN-M05	A3119	5 mm	0.28 7.0	0.32 8.0	0.10 2.5	M5x0.5
LN-M08	A3120	8 mm	0.51 13.0	0.58 14.7	0.16 4.0	M8x1
LN-M12	A3122	12 mm	0.67 17.0	0.76 19.4	0.16 4.0	M12x1
LN-M18	A3125	18 mm	0.94 24.0	1.08 27.4	0.16 4.0	M18x1
LN-M30	A3126	30 mm	1.42 36.0	1.63 41.4	0.20 5.0	M30x1.5
LN-PG36	A3440	47 mm	2.01 51.1	2.20 56.0	0.20 5.0	PG36
LN 1/4-18	A3131	—	0.43"	0.49"	0.22"	1/4-18
LN 1/2-14	A3132	—	0.74"	0.85"	0.43"	1/2-14
300 Series Stainless Steel						
LN-SS12	A3123	12 mm	0.67 17.0	0.76 19.4	0.16 4.0	M12x1
LN-SS18	A3123-0	18 mm	0.94 24.0	1.08 27.4	0.16 4.0	M18x1
LN-SS30	A3123-1	30 mm	1.42 36.0	1.63 41.4	0.20 5.0	M30x1.5
Teflon® Coated						
LN-MT12	A3109	12 mm	0.67 17.0	0.76 19.4	0.16 4.0	M12x1
LN-MT18	A3108	18 mm	0.94 24.0	1.08 27.4	0.16 4.0	M18x1
LN-MT30	A3107	30 mm	1.42 36.0	1.63 41.4	0.20 5.0	M30x1.5

For use with Teflon coated threaded metal barrel sensors.

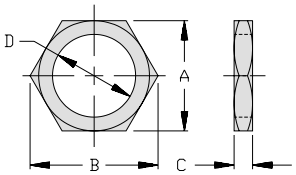

Polyamide Plastic *

Part Number	ID Number	Barrel Diameter	Dimensions A	Dimensions B	Dimensions C	Dimensions D
LN-P05	A3443	5 mm	0.31 7.9	0.35 9.0	0.08 2.0	M5x0.5
LN-P08	A3444	8 mm	0.51 13.0	0.58 14.5	0.16 4.0	M8x1
LN-P12	A3446	12 mm	0.67 17.0	0.75 19.0	0.32 8.0	M12x1
LN-P18	A3448	18 mm	0.94 24.0	1.06 27.0	0.32 8.0	M18x1
LN-P30	A3450	30 mm	1.42 36.0	1.58 40.1	0.39 10.0	M30x1.5

For use with threaded plastic barrel sensors.
* 5 mm Plastic Nut Material: Delrin

LN-P05, LN-P08

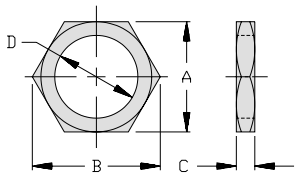

LN-P12, LN-P18, LN-P30

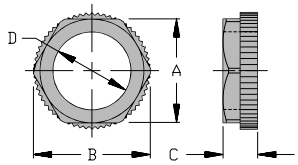

Test Box

Part Number	ID Number	Description
TB 1-B	A3475-1	DC powered test box allows you to quickly test DC sensors.

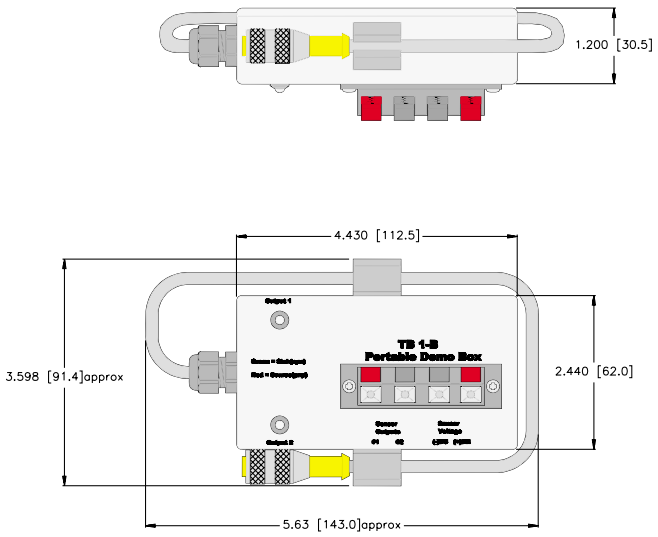

Intrinsic Safety Labels

Part Number	ID Number	Description
IS Labels	A4302	IS Decal 0.59" x 2.36" (10 per sheet)
IS Labels	A4301	IS Decal 2.25" x 3.00" (10 per sheet)
IS Labels	A4300	IS Decal 4.5" x 5.5" (Individual) - Not Pictured

A4302

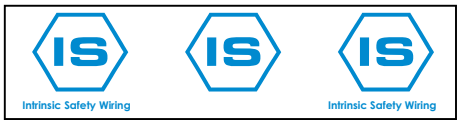

A4301

For identification of intrinsic safety wiring that is not color-coded blue